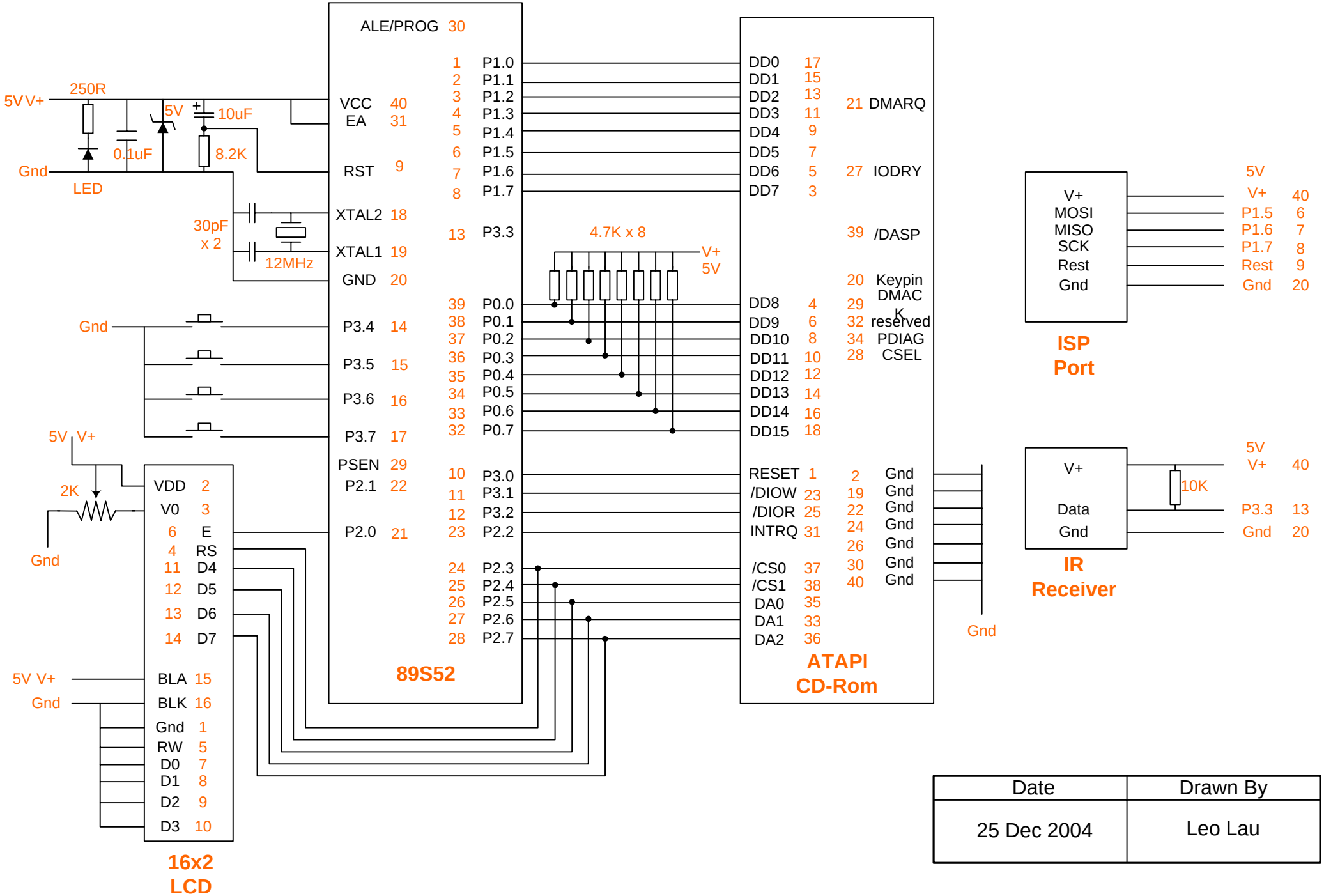

Date	Drawn By
25 Dec 2004	Leo Lau